Evolutionary Optimization of Multi-Agent Control Strategies for Electric Vehicle Charging

Stephan Hutterer
School of Engineering and Environmental Sciences, Upper Austria University of Applied Sciences
Stelzhamerstrasse 23
Wels, Austria
stephan.hutterer@fh-wels.at

Michael Affenzeller
School of Informatics, Communications and Media, Upper Austria University of Applied Sciences
Softwarepark 11
Hagenberg, Austria
michael.affenzeller@fh-hagenberg.at

Franz Auinger
School of Engineering and Environmental Sciences, Upper Austria University of Applied Sciences
StelzhamerstraSSe 23
Wels, Austria
franz.auinger@fh-wels.at

ABSTRACT

While an increasing share of intermittent and non- dispatchable renewable energy plants cause probabilistic behavior at the power grids' supply side, the expected penetration of electric mobility at the demand side offers the opportunity of controllable load. Their optimal coordination is one major concern for future smart grids. Therefore, a multi-agent system will be proposed where each electric vehicle (agent) acts in response to dynamic conditions in its environment according to a given strategy. Optimizing these strategies will be the core of this paper, while evolutionary computation will be used for optimization. Here, simulation models will be applied for problem representation and solution evaluation. Thus, simulation allows modeling of complex as well as probabilistic systems, necessary for the herein tackled probem. In the end, the optimized strategies determine electric vehicles' charging behavior such that end-users' energy demand is satisfied and secure power grid operation is guaranteed throughout the considered grid using power from renewable plants. For solution representation, two different approaches will be compared concerning reachable solution quality as well as problem-specific metrics.

Categories and Subject Descriptors

I.2.6 [**Learning**]: Parameter Learning

General Terms

Theory, Experiments

Keywords

Electric Vehicle Charging Control, Evolutionary Strategies, Policy Optimization, Simulation-Based Optimization

GECCO'12, July 7-11, 2012, Philadelphia, Pennsylvania, USA.

1. INTRODUCTION

Various researchers already investigate the integration of electric vehicle (EV) charging into modern power grids and therefore show the necessity of control strategies [5] [6] [13]. Designing these strategies proved to be a challenging task due to the stochastic nature of individual behavior. Additionally, an increasing share of zero-emission power supply forces the penetration of intermittent and non-dispatchable power plants like wind power or photovoltaics. Their fluctuating and weather-dependent power output further complicates the situation in power grids from the supply side. The combination of electric mobility and probabilistic supply is therefore a highly fruitful field, since controlling EV charging leads to a dispatchable distributed load, which will be the central topic of this work. Therefore, a simulation-based optimization approach will be shown that uses evolutionary algorithms. This approach is applied for optimizing policies within a multi-agent system. The computed optimal policies of the electrified car fleet both satisfy energy demand of individual car users as well as incorporate the physical characteristics of the electric power grid under the special condition of partly probabilistic supply. Since the electric power grid will be considered through load flow simulations, constraints can be integrated that ensure reliable operation and maximize utilization of renewable energy. Thus, a holistic integration of the power grid model into the optimization process is enabled.

One way to solve such a scheduling problem is by calculating a solution that consists of a fixed charging schedule for each vehicle, that considers its forecasted behavior as well as power system conditions in advance. However when the system is very dynamic and situation changes on the fly, planning ahead is difficult. In such a case it would be more appropriate to make decisions as they come up, reacting to a new order situation very quickly. Therefore, optimization of a flexible and reactive charging policy for agents (EVs) is applied, that lets them react to dynamic conditions. This policy is principally the same for all EVs, but using input data from agent's individual environment it leads to agent-specific charging behavior.

The rest of the paper is organized as follows: section two states the problem description while referring to related literature. In section three, the two different solution repre-

sentations are discussed mentioned before. Experiments for both variants are performed in section 4, comparing their achievable outcome. Section 5 rounds up the paper with concluding remarks.

2. OPTIMAL EV CHARGING - PROBLEM STATEMENT

2.1 Problem Formulation

Given a fleet of EVs within a distribution grid, a vector $Pc = [Pc_{1,1}, ..., Pc_{i,n}]$ describes the active charging power of each EV n at time step i over a given time interval. At the end of the considered planning frame, each EV must have received a specific amount of energy for satisfying its daily demand $\sum_{i=1}^{24} P_{i,n} * \Delta t \geq E_{min}$. This constraint is valid assuming that batteries are big enough and the one-way distance of a car does not lead to a low state of charge. Since additional load caused by related charging of electric vehicles can endanger power grid security, constraints have to be satisfied that ensure secure distribution grid operation. Thus, within each time step i, power flow constraints have to be considered. Steady-state security constraints can be formulated according to [16] for ensuring lower and upper bounds for generator real and reactive power output $P_{G_j}^{min} \leq P_{G_j} \leq P_{G_j}^{max}$ and $Q_{G_j}^{min} \leq Q_{G_j} \leq Q_{G_j}^{max}$, over all buses $j = 1, ..., J$. Power flow over transmission lines shall be constrained to $P_l \leq P_l^{max}$ as well as the voltage deviation being restricted to $V_j^{min} \leq V_j \leq V_j^{max}$ for all transmission lines $l = 1, ..., L$.
While satisfying all formulated constraints, the objective function shall be defined of minimizing financial costs of power supply: $min \sum_{j=1}^{J} Cf(Pg)$. Pg in this case is implicitly given by Pc and the remaining load to the system plus power losses, which have to be satisfied.

2.2 Scenario Description

As real-world scenario, the IEEE 14-bus testcase [10] is used as distribution grid model. At four buses in the system, photovoltaic plants are installed as well as two additional wind power plants, which supply renewable power to the system. The resulting power output from these plants is integrated using probabilistic models that describe their mean power supply within the scheduling horizon. Since energy from renewables is assumed to be cheaper than from the remaining energy market, minimizing costs of supply intrinsically means maximizing utilization of renewables. Additionally, it is assumed that all additional energy that has to be served by the slack bus has to be imported from a higher power grid level and thus has to be bought at the energy spot market. Therefore, price data from the european electricity spot market is used for the cost function. Since prices tend to be high during peak hours, minimizing financial costs of power supply causes load-shifting to off-peak periods as we see later when discussing the experiments. A schematic description of the distribution grid can be seen in Figure 1. The IEEE 14-bus testcase is downscaled such that all EVs in the system can cause a maximum charging load that sums up to 10% of the total load in the worst case. This worst case describes the event that all EVs charge at the same time with full power. Avoiding this is actually the aim of charging control within smart grids. The used

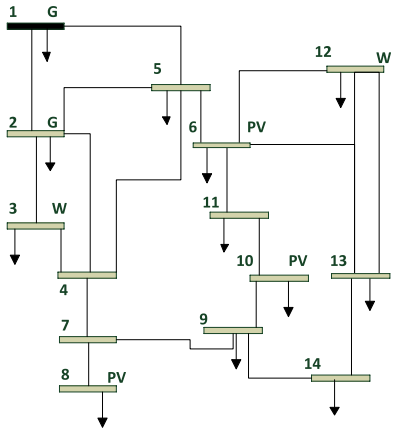

Figure 1: Distribution Grid Layout

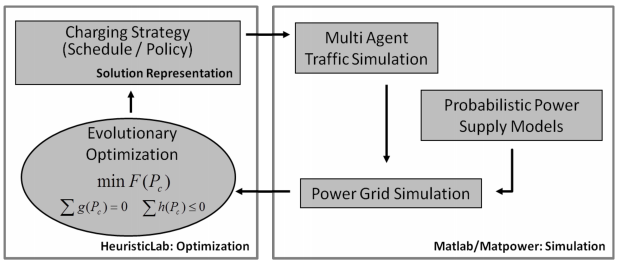

Figure 2: Simulation Optimization Architecture

test system is discussed more in detail in [8], just a brief overview that is needed for outlining the problem scenario is given here.

The outline of the distribution grid model shows the different interconnected buses as well as their characteristics. The black bar shows the slack bus, which is necessary for power flow calculation [16] [17]. There are three buses in the system that serve es generator buses supplying energy from photovoltaics, two buses inject electricity from wind power plants, and additionally to the slack bus, one bus serves as deterministic generator which injects power according to a defined profile. All buses are assumed to be load buses additionally. Assuming that this distribution grid mainly consists of domestic customers, all loads follow a common load profile discussed later. The single loads satisfy this profile with a normally distributed deviation of N(1,0.016), which is a valid assumption [13]. All parts of the simulation are realized as autonomous components, building aggregated the problem representation. The simulation architecture is shown in Figure 2. The simulation is implemented in MatLab, whereas the distribution grid load flow simulation is realized using MatPower [17], an open source toolbox for MatLab.

The simulation model itself consists of three components, including the distribution grid influenced by the probabilistic supply model as well as the traffic model which describes the behaviour of EVs. In the given system, in total $n = 960$ independent agents exist that are simulated to behave according to an Austrian survey on traffic data [4]. E_{min} is defined to be 8kWh over a period of $i = 24$ hours, which yields into a mean driven distance of 40 kilometers per day. These EVs are modeled using two different basic driving patterns,

namely patterns of half-time workers and full-time workers during a week day. This model simulates synthetic driving profiles, that describe location, time step as well as duration of residence of all single EVs. At each location in the simulated system, a charging station may exist according to a certain probability, which conforms with actual real-world activities in charging infrastructure implementation plans. From the renewables point of view, the probabilistic supply models describe the expected injection of power from renewable plants using probability distributions. More information on these models can be obtained in [8], beeing too extensive for the scope of this paper. The distribution grid model takes the resulting load of electric vehicle charging as well as the simulated input from renewable supply for calculating the final power flow solution.
The strategy with which the EVs charge their batteries is defined by the solution candidate, using two different solution representations as discussed in the next section. In the end, the desired solution satisfies EV users' energy demand while considering all constraints from the distribution grid point of view for ensuring secure power grid operation.

3. SOLUTION REPRESENTATIONS

Within this work, two different solution representations will be discussed: the first approach tries to compute the vector Pc statically in advance, considering forecasted behavior through simulation. However when the environment is very dynamic and situation changes on the fly, planning ahead is difficult. In such a case it would be more appropriate to make decisions as they come up, reacting to a new order situation very quickly. Therefore, optimization of a flexible and reactive charging policy for each agent (EV) is applied, that lets it react to dynamic conditions.

3.1 Computing Static Schedules in Advance

This solution representation is extensively discussed in [8]. Principally, it directly contains the vector Pc as real-valued vector, which ensures optimal behavior beforehand considering forecasted behavior of the system. This presentation seems to be the easiest and most intuitive way for tackling this problem, but can lead easily to solution space explosion. When for example handling the herein defined $n = 960$ EVs with $i = 24$ time steps, using Pc directly as solution representation, $960 * 24$ control variables would be needed exceeding a manageable problem size for evolutionary algorithms. In this case, clustering is applied, where agents (EVs) with similar behavior and similar local appearance in the power grid get clustered using the same solution, thus reducing the solution space drastically. Within this study, EVs are clustered to group sizes of 60, which is valid according to the defined problem and leads to a problem size of 384, which is indeed manageable for evolutionary algorithms. Beside the exploding problem size, this representation additionally shows the disadvantage that it considers volatile behavior of the stochastic system in advance, being very unflexible to dynamic conditions.

3.2 Multi-Agent Policy Optimization

When trying to find optimal behavior within a volatile and uncertain system, it's more adequate for each agent to make decisions as they come up, reacting optimally to its individual environment. This can be realized using a policy-based approach, where each agent (EV) in the system receives a flexible policy rather than a static charging schedule. This policy lets him react to influences quickly, but in an optimal manner.

3.2.1 Principles of Policy Optimization

The principle of optimizing a multiagent system based on policies is a common approach in operations research, established for example in the field of production logistics. Here, for example each job within a process chain serves as agent that acts according to a policy which describes its priority at a certain point in the process. This priority decides for example its position within a waiting queue of a specific service. It is based on a policy that is computed using agent-specific input data as actual waiting time, service time, or other logistical metrics. Since serving a number of electric vehicles with power while considering restrictions from the supply infrastructure can be seen as similar problem as we see further, thus, the concept of policy optimization shall be applied now. Here, the aim is not to compute the optimal priority of an agent at a specific point in the process, but to compute its optimal charging power at a specific time step. Therefore, the value "priority" is substituted by the amount of power a car is desired to charge relative to its maximum charging power. A similar work with the aim of demand response has already been performed in the field of electric engineering, also constituting the application of policy-based optimization within this field [12]
[11] provides a huge overview of established priority rules in production plant logistics. These rules are generally dependent on logistic metrics, but can be adapted to the herein handled problem. Many such logistical rules for example prioritize jobs according to their remaining number of operations, distance to due date, imminent operation time or information about their remaining time. Such simple rules can be adapted easily to the problem of charging control. Instead of computing a job's priority based on remaining number of operations or its imminent operation time, using values like an EV's remaining energy demand or its remaining residence time at a charging spot can be taken for computing its necessary charging power. Thus, adaptation of existing rules and their formulation with EV and powergrid specific metrics is absolutely feasible as well as valid for handling the herein defined problem. Additionally to the adapted rules coming from logistics, further rules have to be defined that consider electricity generation and distribution metrics for regarding the power grid situation as well.

In order to get a single policy out of the later formulated amount of simple rules, rule synthesis is applied similar to [14] and [2]. First, all simple rules are normalized according to their maximum value for ensuring that their output value is in the interval [0,1]. The normalized rules r_k with $k = 1, ..., K$ are further combined using equation (1) for computing the charging rate.

$$CR_i = \frac{\sum_{k=1}^{K} r_{k,i} * w_k}{k} \tag{1}$$

Each rule is multiplied by a weighting value w_k in the interval [0,1]. It obviously follows, that the resulting value of the charging rate CR at time step i exists within the interval [0,1] as well, and describes the computed charging power of the EV relative to the maximum power of the charging infrastructure.

In the end, the policy defines the charging behavior of each single EV. Even if the policy is principally the same for all agents, using situation-specific input data it leads to individual and (near-)optimal behavior where $Pc_{i,n}$ is computed exactly at time step i. An illustration of the principle is shown in Figure 3.

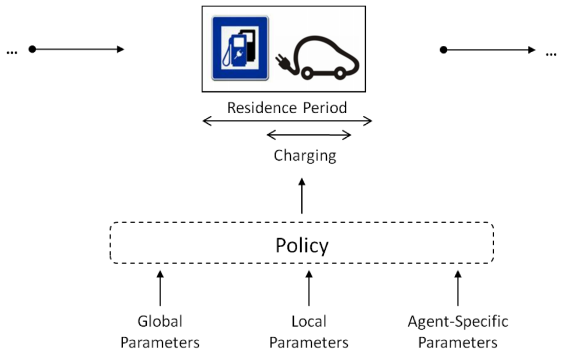

Figure 3: Illustration of Policy Principle

3.2.2 Implementation to Defined Problem

Since there exist generally a high variety of possible rules, those have to be selected, that are suitable for the formulated problem. The finally applied rules are shown in Table 1.

While the first three rules consider agent-specific information of the considered EV, additional rules using local (at the same bus) and global (in the entire grid) information are formulated for regarding the power grid's operation point. Irradiance as well as wind speed data during the whole residence period of an agent is taken into account since using renewable power for charging batteries should be forced. Base load data is used with the intention of shifting charging to off-peak hours. Since the objective function of the optimization problem aims at minimizing financial costs, price data is used as well. For representing local distribution grid aspects, data from connected branches is included as well as information about how many EVs are remaining at the same bus during the considered time steps, using local information.

While the lion's share of rules can be seen of concerning absolute values that do not depend on the states before, i.e. on the evaluation of the policy in step $i-1$, the last 4 rules consider state-dependent rules. Here, the evaluation of the rules depends on the evaluation at the steps before, where the actual charging rate is taken into account that resulted from policy evaluation. The last 7 rules (including MMVA to MCRB) additionally incorporate the interrelation between agents implicitly, that influence the resulting charging rate of an agent according to the actual behavior of the others. Thus, competitive behavior is integrated.

An additional information is important considering each rule: namely if this rule leads to a higher or lower charging rate. Taking for example ETTD: an EV that has a relatively high remaining time left at the charging station should get a lower charging rate at the actual time step. This is intrinsically clear, since there is much time left to get charged, probably more than for other agents. Therefore, this rule is getting inverted. Thus, "prioritize minimum" is added.

For all these rules it is theoretically assumed that the needed information can be obtained. In practice, information technology will be needed providing required data, which could be implemented by aggregators when regarding actual trends in the smart grids research field.

The control variables for the optimization are the weights w_k, therefore, a 23-dimensional real-valued optimization problem has to be tackled.

4. EXPERIMENTS

The central functionality of the optimization approach shall now be discussed.

4.1 Simulation-Based Evolutionary Optimization

Simulation-based optimization with evolutionary algorithms according to [9] is applied for handling this problem. The central idea of this approach is the application of simulation for evaluating the fitness of a solution candidate generated by the metaheuristic optimization algorithm. During evaluation, $Pc_{i,n}$ is computed from the policy for each agent directly in the simulation for the policy-based approach, whereas for the static approach the whole vector Pc is computed explicitly by the optimization algorithm. Given the so computed charging rates, the resulting fitness of the solution candidate is evaluated through simulation. This evaluation will be sampled a sufficient number of times in order to overcome uncertainty of the stochastic system which is represented through simulation. Uncertainty in this case occurs because of probabilistic models of intermittent supply on the one hand, but because of the uncertain individual traffic behavior on the other hand. The optimization process especially for the policy-based multi-agent approach is shown in Figure 4.

The used algorithm is abstracted being a single box and will be discussed later. The solution evaluation is the more interesting part now: as known from the problem description, the model consists of different parts including electric distribution grid model, electric vehicle traffic model and probabilistic supply model. These three simulation models are aggregated for evaluating a solution candidate. At the beginning of the evaluation, the traffic model as well as the renewable sources are simulated. Using this data, for the policy-based approach the resulting charging rate is computed for each agent over all time steps, serving as input data for the distribution grid model. Using load flow simulation, all constraints as well as the resulting fitness value are computed. Constraints are incorporated using the concept of penalization, where the fitness of a solution candidate is penalized by the degree of constraint violation. The final fitness function is shown in equation (2), where the financial objective function value is enhanced by a vector CV describing constraints violations. Handling multiple constraints as defined above, a vector R describes the weight of each constraint relative to the objective function. Since the problem is stochastic and the respective simulation model will deliver deviating fitness values for the same solution candidate, each candidate is sampled a sufficient number of times in order to estimate its true performance within the uncertain environment when averaging its fitness over all samples.

$$Minimize : \sum_{i=1}^{24} [Cf(Pc) + \overline{R} * \overline{CV(PC)}] \qquad (2)$$

Table 1: Formulation of Simple Rules

Rule	Acronym	Description
Residence Time So Far	RT	Total residence time during all previous time steps, prioritize minimum
Estimated Time to Departure	ETTD	Remaining residence time at actual charging station, prioritize minimum
Passed Residence Time	PRT	Passed residence time at actual charging station, prioritize minimum
Actual Irradiance	AI	Actual solar irradiance relative to known maximum, prioritize maximum
Past Irradiance	PI	Past mean solar irradiance during PRT, prioritize maximum
Estimated Irradiance	EI	Estimated mean solar irradiance during ETTD, prioritize maximum
Actual Wind Speed	AWS	Actual wind speed relative to known maximum, prioritize maximum
Past Wind Speed	PWS	Past mean wind speed during PRT, prioritize maximum
Estimated Wind Speed	EWS	Estimated mean wind speed during ETTD, prioritize maximum
Actual Base Load	ABL	Actual base load relative to peak load value, prioritize minimum
Past Base Load	PBL	Past mean base load during PRT, prioritize minimum
Estimated Base Load	EBL	Estimated mean base load during ETTD, prioritize minimum
Actual Price	AP	Actual price relative to peak price value, prioritize minimum
Past Price	PP	Past mean price during PRT, prioritize minimum
Estimated Price	EP	Estimated mean price during ETTD, prioritize minimum
Distance to Peak Load	DTP	Absolute temporal distance from time of peak load, prioritize maximum
Mean MVA Rating	MMVA	Mean MVA rating of connected branches relative to maximum ratings in the grid, prioritize maximum
Number of EVs at Bus	NREVB	Actual number of EVs remaining at bus, prioritize minimum
Mean Number EVs during PRT	MNREVB	Mean number of EVs remaining at bus at each time step during PRT, prioritize minimum
State Dependent Policies		
Number of EVs Charging	NREVC	Total number of EVs charging during last time step, prioritize minimum
Number of EVs Charging, Same Bus	NREVCB	Total number of EVs charging during last time step at same bus, prioritize minimum
Mean Charging Rate	MCR	Mean charging rate (relative to maximal charging power) per EV during last time step over all EVs, prioritize minimum
Mean Charging Rate, Same Bus	MCRB	Mean charging rate (relative to maximal charging power) per EV during last time step over all EVs at same bus, prioritize minimum

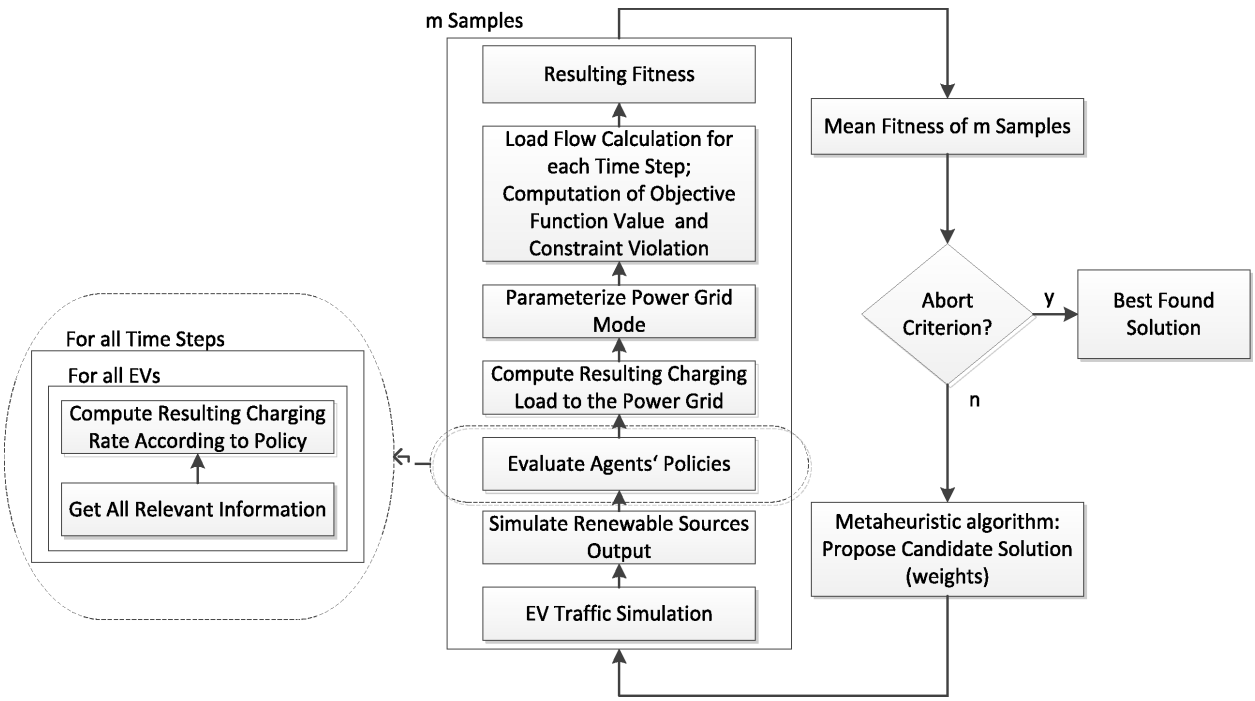

Figure 4: Optimization Process Flow

Principally, evolution strategies (ES) [3] are used as evolutionary algorithms, which have been successfully proved to be performant for real-valued optimization problems. In principle, ES is a nature-inspired population-based optimization algorithm, that tries to improve a set of solution candidates until a certain stopping criterion is reached. Contrary to other related algorithms, ES selects the best individuals within each generation and improves them where mutation is the main evolutionary operator. It is generally proven to be a powerful and efficient metaheuristic algorithm for real-valued optimization problems, supplied by its special ability of self-adaptiveness within the search process. For both approaches considered within this paper, different algorithm parameterizations have been tested in order to get the best performing. Tests have been carried out extensively thanks to HeuristicLab's huge algorithm library. Finally, best parameters have been found as shown in Table 2. A detailed description of the parameters can be found in HeuristicLab [7] which is used as optimization framework using MatLab as Plug-In, respectively the appropriate literature [1] [15].

Table 2: Configurations Evolution Strategies

Approach 1: Optimization of Static Schedule	
Type	(20 + 40)-ES
Manipulator	SelfAdaptiveNormalAllPositions-Manipulator
Recombinator	Single Point Crossover
Parents per Child	2
Stopping Criterium	Maximum Generations: 5000
Sampling	Sample Each Solution 6 Times
Approach 2: Policy Optimization	
Type	(5 + 15)-ES
Manipulator	SelfAdaptiveNormalAllPositions-Manipulator
Recombinator	Average Crossover
Parents per Child	2
Stopping Criterium	Maximum Generations: 5000
Sampling	Sample Each Solution 3 Times

Since time for evaluation is the main critical issue for simulation-based optimization, the optimization algorithm has to be adapted accordingly. Evaluation of the policy principally takes longer than the evaluation of the static schedule. Thus, experiments for policy optimization have been performed with drastically reduced population sizes as well as number of resulting total evaluations. With these configurations, solutions have been found that will be compared to each other consequently.

4.2 Experimental Results

Using the optimized strategy, each agent (EV) in the system acts individually, yielding in a charging strategy over the defined time horizon that is suited optimally to its individual behavior. For the first approach when optimizing static schedules in advance, this individualism is generated because each EV/cluster receives its own schedule. For the policy-based approach, each EV receives the same policy, but using individual information from its environment as input to the policy, agent-specific behaviour results. The finally best found results are visualized in Figures 5 and 6, where the mean resulting charging power over all EVs is plotted with grey bars. Additionally, the base load to the power grid is indicated by the dotted line relatively to its peak load.

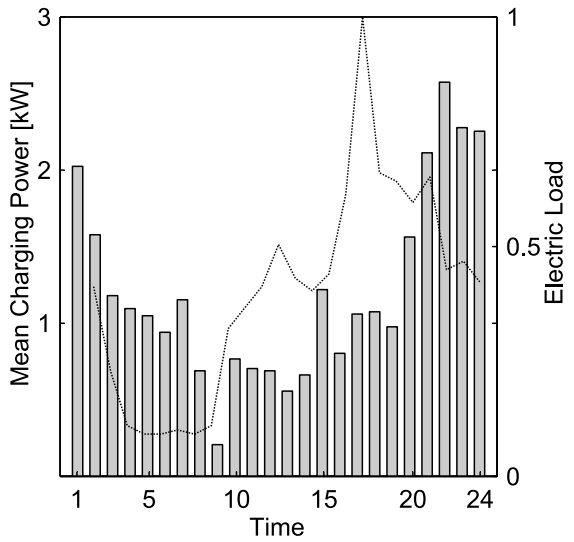

Figure 5: Mean Charging with Static Schedules

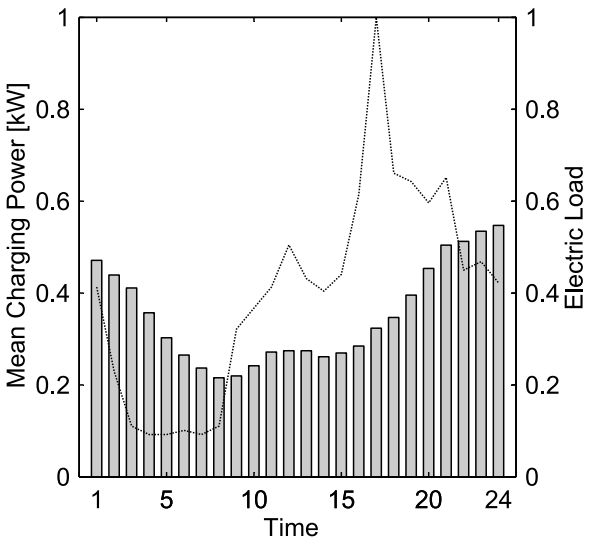

Figure 6: Mean Charging with Reactive Policy

The two results can be compared intuitively considering the mean resulting charging strategy over all agents: the static approach clearly tends to schedule much more energy to each agent that it actually needs, almost around 20kWh. This is because of the aforementioned averaging effect that

occurs because of the clustering of similar vehicles. Even if all vehicles within such a cluster show similar behaviour, individual probabilistic behavior occurs. Thus, scheduling more energy as needed to each single vehicle allows such individual probabilistic behavior while guaranteeing enough energy to everyone. Sure, from a power grid point of view, this behavior is not optimal since free capacities cannot be used efficiently. The policy-based approach on the other hand does not need any clustering in order to handle the high number of agents, since each EV acts individually in response to its environment, using one generic policy for all agents. Therefore, each agent receives exactly the amount it actually needs, leading to more individual charging strategies. Considering the temporal distribution over the time for both cases, it clearly seems that charging during nighttime is forced. This is on the one hand because of the used price-profile for electric energy that shows lower prices at night times, but also because of the lower base load resulting from the daily load profile. Especially the policy-based approach additionally shows a small peak during midday, which results directly from the higher energy supply from photovoltaics at this time. Since this kind of supply is directly incorporated into the specified rules, it is integrated to the final charging policy.

Some numeric comparisons are also needed in order to investigate the performance of both approaches. Table 3 shows metrics that have been defined for comparison reasons. Principally, it would be obvious to compare the achieved fitness value of both approaches. But since the used cost function describes financial cost for energy supply, it's clear that the static approach results in a multiply higher fitness value, since it schedules much more energy to each agent (which it actually will not need). So, other metrics are introduced that lead to fundamental findings.

In order to get a sufficient estimate of the true performance of each best found solution within the uncertain environment, both considered solutions have been evaluated on 100 runs. The first metric describes the standard deviation of the achieved fitness over 100 evaluations and is therefore a metric for considering the robustness of the found solution within the probabilistic system. "Overcharging" describes the fact that both approaches tend to schedule more energy to each agent than it acutally needs, in order to satisfy the constraint for E_{min} defined above. "Individualism" tries to represent the self-dependence of each agent that results from the used optimization approach. Therefore, for each agent the mean euclidean distance from its resulting charging strategy to all other strategies from all agents is computed in order to describe its individualism. For this metric, the standard deviation is further computed over all agents. So, if this standard deviation is high, this means that there is a high difference in resulting behavior between all agents, whereas a low value would mean that the agents tend to have similar charging behavior.

In terms of robustness, the static approach clearly outperforms the policy-based one. This is in fact clear, since it schedules as mentioned above higher amounts of energy to each agent than it needs. Thus, probabilistic conditions have less influence, since they are compensated by scheduled strategies with high degree of freedom. So this imprecision of the static approach has the disadvantage of not optimally using existing capacities in the power grid, but on the other hand it leads to a robustification of the solution. As discussed above, the resulting overcharging comes into play drastically for the static approach, while the policy-based strategy schedules nearly the amount of energy to each agent that it needs in fact. Considering individualism, interestingly there are higher differences between the resulting strategies of all agents when optimizing agents' strategies statically. Thus, even if agents within a cluster receive exactly the same strategy, the resulting variance between the clusters leads to an overall higher individualism. This observation is interesting, showing that the optimized policy consisting of the defined rules admits lower individualism to each agent, than the static approach. Here, additional rules have to be defined, that integrate more agent-specific information into the optimized policy.

Table 3: Quantitative Comparison

Metric	Reactive Policy	Static Schedules
STD Fitness	1.04 %	0.51 %
Overcharging	5.1 %	125.3 %
Individualism	27.8 %	41.79 %

Beside all these quantitative result, one qualitative fact clearly privileges the optimization of policies: no matter how many agents are modeled within the system, the problem size in means of the length of the solution vector remains constant, since one generic policy is computed for all agents. For the static approach, this problem size directly grows with the number of agents, which makes investigating more complex problems impossible. From a power grid point of view, analyzing bigger distribution systems with thousands of EVs will be a fruitful research ground, being only possible with the policy-based approach.

Table 4 shows the weights w_k for the final best found solution in case of the policy optimization. Most rules are weighted close to 1, some conclusions can be stated: All three rules concerning the residence time of the EVs are weighted with 1, underlying that residence time at charging stations seems to be the most important information for satisfying an agent's energy demand. Interestingly, when considering renewable power plants, forecasts (EI, EWS) are weighted lower than actual and past values. Sure, the actual value seems to be the most important one when trying to schedule as much as renewable energy to the EVs as possible. Base-load related as well as price related rules are correlated since both groups have the aim of shifting charging to time steps of low load (which are considerably related to time steps of low price). Here, weights considering base-load data are significantly higher, which clearly states the objective that charging at off-peak times and thus maintaining secure power grid operation (which is a hard constraint) outranks low costs of charging. State dependent rules considering the charging behavior of other agents are especially important for handling the multi-agent system, if agents remaining at the same bus are considered.

5. CONCLUSIONS

A simulation-based evolutionary optimization approach has been presented that is used for computing optimal in-

Table 4: Best Found Solution

Rule	Weight w_k	Rule	Weight w_k
RT	1	AP	0.9166
ETTD	1	PP	0.6943
PRT	1	EP	0.9166
AI	0.9613	DTP	0.9572
PI	0.9959	MMVA	0.8560
EI	0.2370	NREVB	0.6080
AWS	0.9814	MNREVB	0.9393
PWS	1	NREVC	0.8132
EWS	0.5910	NREVCB	1
ABL	1	MCR	0.9939
PBL	0.9861	MCRB	0.9548
EBL	1		

telligent charging strategies for a fleet of electric individual vehicles that exist within a distribution grid, building a multi-agent system. The concept of using simulation for evaluation enables that probabilistic influences of both individual traffic behavior as well as intermittent energy supply can be incorporated during the optimization process. In the end, intelligent strategies have been found that satisfy operation constraints from the electric power grid point of view while supplying energy demand by individual vehicle users. Two different solution representations have been discussed. First a static one was introduced where individual charging strategies for all agents during a specific time interval are computed in advance. Since in such a dynamic and uncertain environment it is more appropriate for an agent's behavior to make decisions as they come up, a more sophisticated approach is introduced that optimizes a generic policy. This policy is the same for each agent, but using agent-specific input data from the environment, it leads to individual charging behavior. Comparisons showed that it is possible for the static approach to produce compatible results, but in order to meet higher problem sizes, using optimization of generic policies will be more accurate.

6. ACKNOWLEDGMENTS

This project was supported by the program Regionale Wettbewerbsfähigkeit OÖ 2010-2013, which is financed by the European Regional Development Fund and the Government of Upper Austria.

7. REFERENCES

[1] M. Affenzeller, S. Wagner, S. Winkler, and A. Beham. *Genetic Algorithms and Genetic Programming: Modern Concepts and Practical Applications.* CRC Press, 2009.

[2] A. Beham, M. Kofler, S. Wagner, M. Affenzeller, H. Heiss, and M. Vorderwinkler. Enhanced priority rule synthesis with waiting conditions. In *Proceedings of the European Modeling and Simulation Symposium (EMSS)*, 2010.

[3] H. G. Beyer and H. P. Schwefel. Evolution strategies - a comprehensive introduction. *Springer Natural Computing*, 1:3–52, 2002.

[4] BMVIT. Austrian survey on traffic data "verkehr in zahlen 2007"; http://www.bmvit.gv.at/service/publikationen/verkehr/gesamtverkehr/viz.html, Mar. 2012.

[5] K. Clement, E. Haesen, and J. Driesen. The impact of uncontrolled and controlled charging of plug-in hybrid electric vehicles on the distribution grid. In *Proceedings of the European Ele-Drive Conference.* EET-2008, 2008.

[6] K. Clement, E. Haesen, and J. Driesen. Stochastic analysis of the impact of plug-in- hybrid electric vehicles on the distribution grid. In *Proceedings of the 20th International Conference on Electricity Distribution.* CIRED, 2009.

[7] HEAL. Heuristiclab - a paradigm-independent and extensible environment for heuristic optimization; http://dev.heuristiclab.com/trac/hl/core, Mar. 2012.

[8] S. Hutterer, F. Auinger, and M. Affenzeller. Metaheuristic optimization of electric vehicle charging strategies in uncertain environment. In *International Conference on Probabilistic Methods Applied to Power Systems, accepted*, 2012.

[9] S. Hutterer, F. Auinger, M. Affenzeller, and G. Steinmaurer. Overview: A simulation based metaheuristic optimization approach to optimal power dispatch related to smart electric grids. In *Life System Modeling and Intelligent Computing (LNCS 6329)*, 2010.

[10] IEEE. Distribution grid test cases; http://www.ee.washington.edu/research/pstca/, 2012.

[11] S. Panwalkar. A survey of scheduling rules. *Operations Research*, 25(1), January-February 1977.

[12] S. Shao, M. Pipattanasomporn, and S. Rahman. *IEEE Transactions on Smart Grid*, 2:624 – 631, December 2011.

[13] J. G. Vlachogiannis. Probabilistic constrained load flow considering integration of wind power generation and electric vehicles. *IEEE Transactions On Power Systems*, 24(4), 2009.

[14] S. Vonolfen, M. Affenzeller, A. Beham, E. Lengauer, and S. Wagner. Simulation-based evolution of resupply and routing policies in rich vendor-managed inventory scenarios. *Central European Journal of Operations Research (CEJOR), accepted; available online: DOI: 10.1007/s10100-011-0232-5*, 2012.

[15] S. Wagner, M. Affenzeller, S. Winkler, R. Braune, G. Kronberger, A. Beham, and M. Affenzeller. Benefits of plugin-based heuristic optimization software systems. In *LNCS 4739*, pages 747–754. Springer, 2007.

[16] A. J. Wood and B. F. Wollenberg. *Power Generation, Operation, and Control, 2nd Edition.* Wiley-Interscience, 1996.

[17] R. D. Zimmerman, C. E. Murillo-Sánchez, and D. D. Gan. Matpower - a matlab power system simulation package; http://www.pserc.cornell.edu/matpower/#docs, Mar. 2012.